eSET Touchfree Basin mixer with temperature setting for combining with free-standing fittings -

35 740 970

- lead-free
- 2x back flow preventer
- 2x male thread 1/2" connection
- outlet with high-pressure hose
- surface-mounted installation

Can be combined with spouts from the Vaia, Lissé, CL.1, IMO, Tara., Tara Logic, Meta.02, Deque, Supernova, Symetrics, LULU and MEM series

Cannot be combined with spouts with a pull-rod pop-up waste.
Please combine with item no. 10 126 970-FF

Not suitable for combination with steel basins.

Other series and finishes on request (x-TRA SERVICE)

ATTENTION: Separate terms and conditions for electronic articles are applicable.

eSET Touchfree Basin mixer with temperature setting for combining with free-standing fittings -

35 740 970
mm [inches]

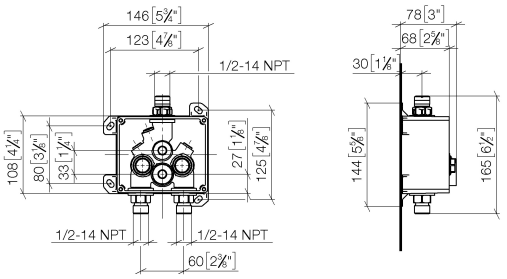

Codes & Standards

UL 1951

eSET Touchfree Basin mixer with temperature setting for combining with free-standing fittings -

35 740 970

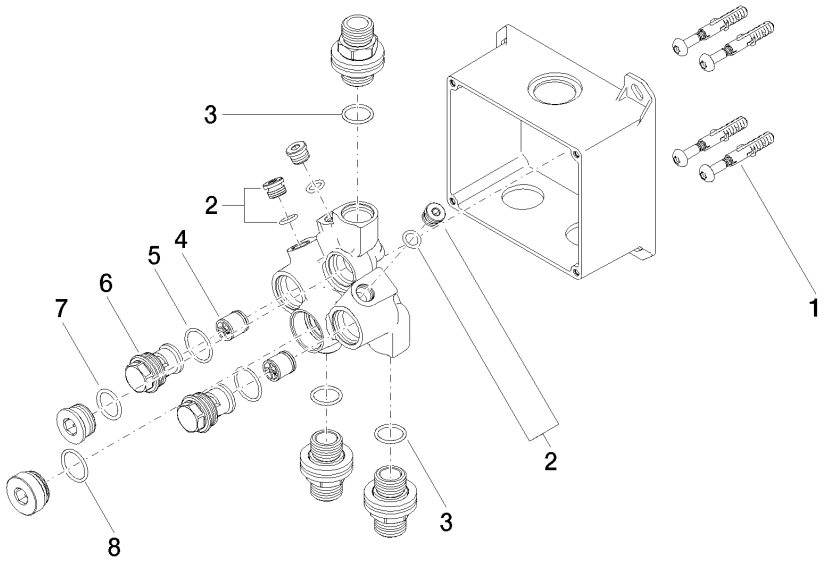

Spare parts list

No.	Item Number	Name	Quantity used	Delivery time
1	04 30 31 024 01 90	fixing set	2	2
2	04 31 20 039 11 90	plug	3	2
3	90 14 10 010 00 90	seal	3	2
4	90 23 01 040 00 90	back-flow preventer	2	2
5	90 14 10 056 00 90	seal	2	2
6	09 24 03 219 90	nipple	2	2
7	09 14 10 117 90	seal	1	2
8	09 14 10 031 90	seal	1	2

We reserve the right to change designs, product range and technical specifications without prior notice.
More information can be found at: www.dornbracht.com +49 (0) 2371 8899 900 mail@dornbracht.com